EKO

ELECTRIC SCHEMATIC

Mod.
NEW RHYTHM BOX

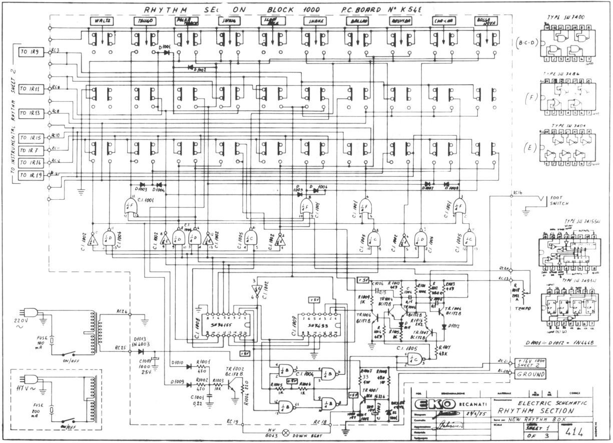
RHYTHM SEC ON BLOCK 1000 P.C. BOARD N° K54E
WALTZ
TANGO
POLKA MARCH
SWING
SLOW ROCK
SHAKE
BALLAD
RHUMBA
CHA-CHA
BOSSA NOVA
TO IR9
TO IR11
TO IR13
TO IR15
TO IR7
TO IR16
TO IR19
TO INSTRUMENTAL RHYTHM SHEET 2
RC3
RC8
RC10
RC11
D1001
D1002
D1003
D1004
D1005
D1006
D1007
D1008
C.I. 1001
C.I. 1002
C.I. 1003
C.I. 1005
C.I. 1006
1/4 F
1/4 D
1/4 C
1/6 E
TYPE SN 7400
(B-C-D)
TYPE SN 7486
(F)
TYPE SN 7404
(E)
GND
RC16
FOOT SWITCH
TYPE SN 74155N
TYPE SN 7493N
RC24
RC23
R 1018 2M2 A
TEMPO
D1001 ÷ D1012 = 1N4448
RC21
+16V FROM SHEET 2
RC20
GROUND
220V ~
FUSE 100 mA
ON/OFF
117V ~
FUSE 200 mA
ON/OFF
RC26
RC25
D1013 1N4003
C1007 1000 25V.
C.I. 1008
SN 74155
C.I. 1009
SN 7493
+5V
D1010
D1009
R1001 470
R1002 470
R1003 10K
C1001 0,22
TR1002 BC172 B
R1004 220
RC19
RC18
MV 6063
DOWN BEAT
C.I. 1004
1/4 B
R1005 1K
R1006 1K
R1007 33 5W
R1008 470 1W
TR1001 BD 16336
C1002 1000 16V
C1003 220 16V
DZ1001
R1009 1K
C1006 0,15
R1010 4K7
C1004 0,15
R1011 100K
R1012 180K
R1013 4K7
C1005 0,1
TR1004 BC172B
TR1005 BC172B
TR1006 BC172B
TR1007 BC172B
R1014 4K7
R1015 1K
D1011
R1016 2K2
D1012
R1017 47K
C.I. 1005
1/4 C

EKO RECANATI

29/4/75

ELECTRIC SCHEMATIC
RHYTHM SECTION

NEW RHYTHM BOX

SHEET 1
OF 3

414

INSTRUMENTAL RHYTHM BLOCK 900 P.C. BOARD N° K 544-B

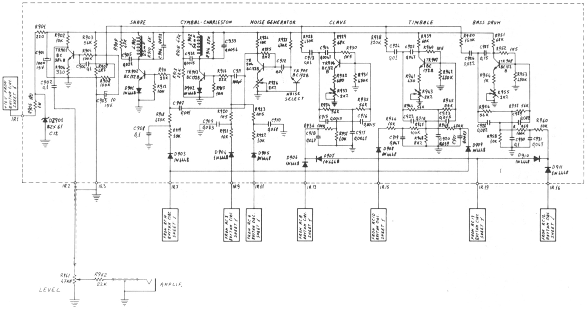
SNARE
CYMBAL-CHARLESTON
NOISE GENERATOR
CLAVE
TIMBALE
BASS DRUM
+16V FROM RHYTHM CIRC. SHEET 1
IR1
R901 220
C901 1000 15V
R902 10K
TR901 BC 384B
R906 330
R903 56K
R904 100K
C904 0.1
R907 4K7
R908 100K
C902 0,1
C903 10 15V
R905 180 1W
DZ901 BZX 61 C12
R909 27K
C905 0,022
L901 0,47 25mH
R910 1K
C906 0,033
TR902 BC172B
D901 1N4448
R911 22K
R912 10M
R915 47K
L902 0,47 56mH
C932 0,0015
R914 27K
C933 0,0056
R913 22K
TR903 BC172B
D902 1N4448
R916 22K
R917 10M
C911 100pF
C907 0,001
R918 470K
C908 0,1
R919 10K
D903 1N4448
R920 1M5
C909 0,033
R921 10K
D904 1N4448
R924 10K
R925 2M2
TR 904 BC172B
R926 2K2
C912 0,01
R927 470K
TR 905 BC172B
NOISE SELECT
R923 1M5
C910 0,068
R922 10K
D905 1N4448
R928 470K
C913 0,01
C914 0,0047
R929 68K
R930 1M5
TR906 BC172 B
R931 470K
R932 680
R933 2K2
R934 56K
R935 56K
C915 0,0015
C916 0,0015
R936 100K
C918 0,047
R937 10K
C917 0,0047
D906 1N4448
D907 1N4448
R938 220K
C924 0,01
C925 0,047
R939 68K
R940 1M5
TR907 BC 172B
R941 470
R942 470K
R943 2K2
R944 56K
R945 56K
C922 0,015
C923 0,015
R946 10K
R947 100K
R949 470K
C919 0,047
R948 8K2
C920 0,039
C921 0,0033
D908 1N4448
D909 1N4448
R950 150K
C926 0,022
C927 0,15
R951 68K
R952 1M5
TR 908 BC172 B
R953 470K
R954 1K
R955 2K2
R956 56K
R957 56K
C929 0,082
C928 0,082
R 959 100K
R960 10K
R958 10K
C930 0,1
C931 0,047
D910 1N4448
D911 1N4448
IR2
IR3
IR7
IR9
IR11
IR13
IR15
IR19
IR16
FROM RC14 RHYTHM CIRC. SHEET 1
FROM RC3 RHYTHM CIRC. SHEET 1
FROM RC6 RHYTHM CIRC. SHEET 1
FROM RC8 RHYTHM CIRC. SHEET 1
FROM RC10 RHYTHM CIRC. SHEET 1
FROM RC13 RHYTHM CIRC. SHEET 1
FROM RC12 RHYTHM CIRC. SHEET 1
R961 47KA
LEVEL
R962 22K
AMPLIF.

POS. | DENOMINAZIONE | MATERIALE | N. PEZZI | N. DIS. | CODICE

EKO RECANATI

Disegnato 29/4/75
Controllo
Approvazione
Materiale
Trattamento

Denominazione ELECTRIC SCHEMATIC
INSTRUMENTAL-RHYTHM SECTION
Serve per: NEW RHYTHM BOX
SCALA
SHEET 2
OF 3
NUMERO 414
MODIFICHE

INSTRUMENTAL RHYTHM SECTION
BLOCK 900 P.C. BOARD N° K544B

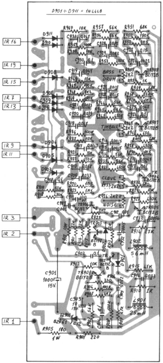
D901 ÷ D911 = 1N4448
IR 16
IR 19
IR 15
IR 7
IR 13
IR 9
IR 11
IR 3
IR 2
IR 1
BASS DRUM
TIMBALE
CLAVE
NOISE
D911
D910
D908
D907
D909
D906
D904
D905
D903
D901
D902
R960 10K
R957 56K
R951 68K
R905 180 1W
R901 220
C901 1000 15V
L902 56mH
L901 25mH
Z901 BZX61 C12

RHYTHM SECTION BLOCK 1000 P.C. BOARD N° K 548-A

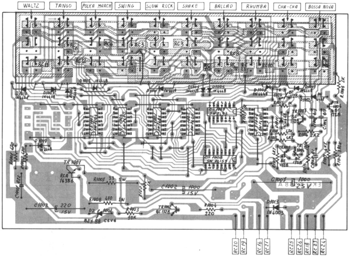
WALTZ
TANGO
POLKA MARCH
SWING
SLOW ROCK
SHAKE
BALLAD
RHUMBA
CHA-CHA
BOSSA NOVA
TR1001 RCA 16386
R1007 33 5W
C1002 1000 15V
C1001 1000 25V
C1003 220 15V
R1008 470 1W
DZ 1001 BZX88 C5V6
R1003 10K
TR1002 BC178
R1004 220
D1013 1N4003
D1009 1N4448
RC20
RC19
RC16
RC21
RC25
RC26
RC18
RC23
RC24

EKO RECANATI		Denominazione	PHANTOM DRAWINGS P.C. RHYTHM - INSTRUMENTAL	
Disegnato	Mancinelli	6-5-75	Serve per: NEW RHYTHM BOX	
Controllo			SCALA	
Approvazione	Patrizi		SHEET 3 OF 3	NUMERO 414
Materiale				
Trattamento				

MODIFICHE